DURABAL BK

Balcony angle profile with drip edge

- Information Sheet -

With 18 mm facing

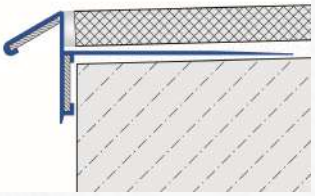

With 60 mm facing

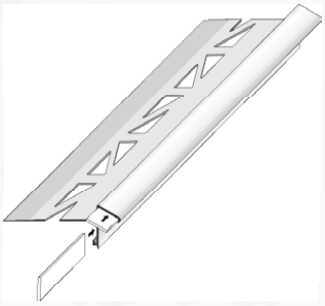

PROPERTIES:

The DURABAL BK edge profile is made of anodized aluminum and has an inclined drip edge providing the optimum finish for balcony and patio edges with regard to both visual appeal and technical function. These profiles are available with a vertical facing height of 18 to 73 mm, allowing the entire visible edge of the balcony construction (depending on the flooring height) to be concealed and effectively sealed.

The DURABAL BK edge profiles are joined together using aluminum connectors which prevent unsightly misalignments in the joints. A small gap of approximately 1 mm must be left between the ends of the profiles to prevent stresses in the material. Matching corner pieces are used to create clean and precise inside and outside edges.

Dural
711 N Varnell Rd
Tunnel Hill, GA 30755
800.278.1956
www.dural.com

Since the usage and finishing of the product is not under our control, we accept no liability for the success of the work and can therefore only guarantee the nature of our products as per the accompanying product data sheets and in accordance with our general terms and conditions of sale. The properties listed here represent no guarantee with respect to the eventual use of our products. We reserve the right to make changes due to technical advances. Any other technical information given in the course of a consultation must be confirmed in writing. Colours shown here are restricted by the printing techniques and may differ from those exhibited by the products themselves. We also reserve the right to make alterations to the product technology or design. Only the current version of this data sheet is valid. Such versions are accessible by anyone via the internet. The issue of the latest data sheet invalidates all those that have been published beforehand.

DURABAL BK

Balcony angle profile with drip edge

- Information Sheet -

THE DURABAL BK edge profiles can also be used to face the vertical edges of balconies and patios. Before the tiles are laid, the whole surface of the profile's perforated leg must be taped over using WP 150 sealing strips, bonded with thinset mortar. If a decoupling mat is to be used beneath the tiles, this should be laid up to the horizontal leg, with no overlap. In this case, the WP 150 sealing tape must be bonded across the full area of the horizontal web and the decoupling mat. The floor tiles are laid flush to the top edge of the profile, with a 5-mm wide joint.

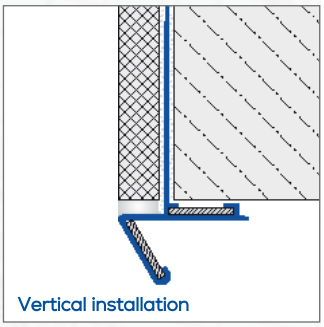
Vertical installation

CLEANING AND CARE:

When installing the DURABAL BK edge profiles and when laying and grouting the joints, all grout or adhesive residues must be removed immediately from the visible aluminium surfaces to prevent staining. The same applies to all other materials that do not have neutral chemical properties.

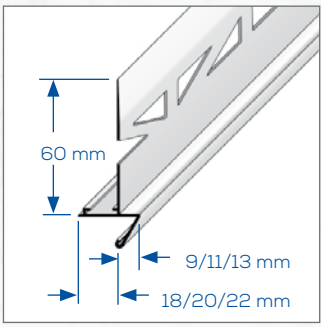

Care must also be taken to ensure that cement removers used to clean the surface of the ceramic tiles do not come into contact with the surface of the profiles. Protective measures must be taken, in this case, to prevent any damage to the surface.

To conserve the elegant appearance of the profiles in the long term, we recommend regular cleaning using a neutral cleaning agent (with a pH value between 6.5 and 7.5) that is non-abrasive. As a rule, regular cleaning with lukewarm water and a clean linen cloth is sufficient.

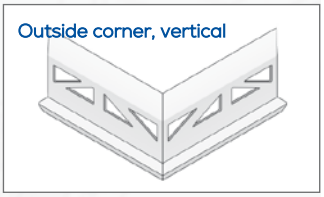

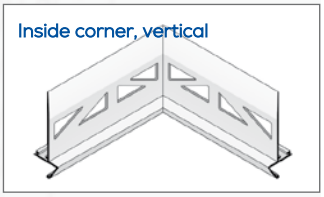

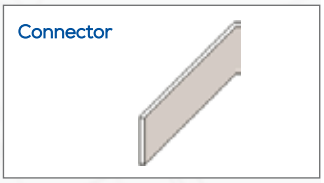

PRODUCT DATA:

MATERIAL:	Anodized aluminum
THICKNESS OF ANODIZED LAYER:	Approx. 15 µm, in line with DIN 17611.
PROFILE LENGTH:	300 cm
HEIGHT:	Flooring height: 9 / 11 / 13 mm Facing height: 18 / 20 / 22 mm or 60 / 62 / 64 mm
WIDTH OF HORIZONTAL WEB:	60 mm
TYPE OF USE:	Balcony edge profile with drip edge, for horizontal or vertical installation
MANUFACTURE:	In accordance with DIN EN 755-1, "Aluminium and aluminium alloys – Extruded rod/bar, tube and profiles - Part 1: Technical conditions for inspection and delivery".
COEFFICIENT OF THERMAL EXPANSION:	Aluminium = 10^{-6} x 24 /°C

Dural
711 N Varnell Rd
Tunnel Hill, GA 30755
800.278.1956
www.dural.com